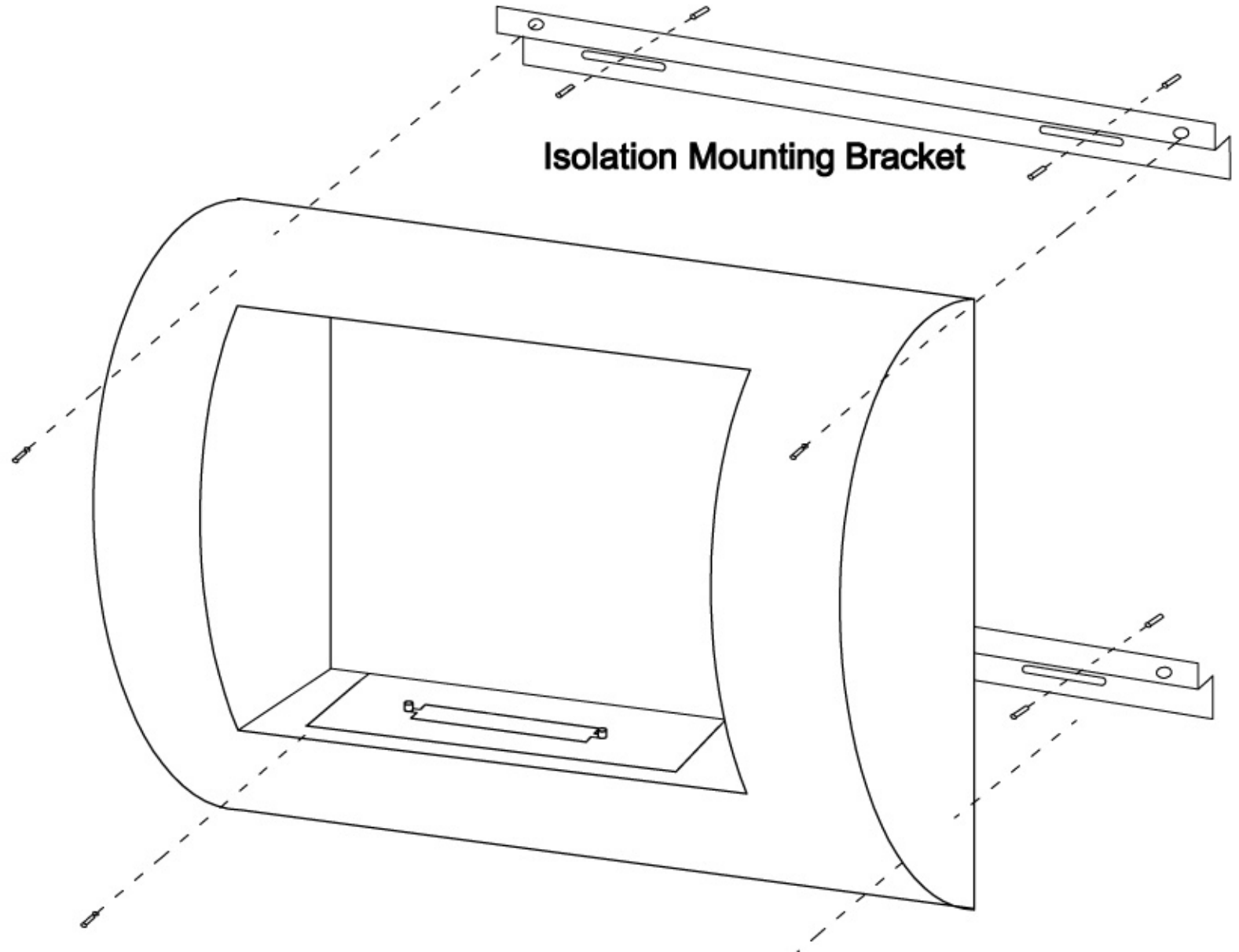
Isolation Mounting Bracket